TRANE®

Engineering Bulletin

Water Side Heat Recovery

60-150 RTWD, 50/60 Hz Water-Cooled Series R™ Chillers

December 2008

RLC-PRB023-EN

RTWD chillers work well in heat recovery and water to water heat pump applications. The maximum condenser temperature exceeds that of previous chillers, allowing the RTWD to provide up to 140°F water. Not only can the RTWD provide hot water, the hot water temperature control option allows for the chiller to be used and controlled primarily for producing hot water.

Discussion

Heat recovery, heater, or heat pump?

When discussing chillers used in heat-recovery applications, the terms heat pump, heater, and heat recovery are often used interchangeably.

- When the primary function of a chiller is to provide cooling, and a portion of its rejected heat is used to satisfy heating loads, this is referred to as heat recovery.
- When a chiller is used to provide heat from its condenser as its primary function, the chiller can be thought of as a water to water heat pump or a heater.
- A heat pump is commonly thought of as a chiller with the capability for the evaporator and condenser to change roles. It is important to note the RTWD does not operate as a heat pump (no reversing valve), however, it can provide both chilled and hot water - as can a heat pump.

Water heating

Many commercial facilities use water for washing, showering, and other everyday tasks.

- Hospitals: laundry, showers, and sterilization (often separate from other systems)
- Dormitories and Correctional facilities: laundry, showers, and general usage
- Hotels: laundry, showers, pool heat, and general usage

Air heating

- Variable volume reheat - humidity control
- Constant volume reheat - humidity control or space temperature control
- Outdoor air preheat
- Pre-heat dedicated outdoor air units with CDQ™ (type III desiccant wheels)

Heat recovery

Use waste heat to save energy and water

In a water-cooled cooling system, heat is transferred from the condenser to the outdoor air via water flowing across a cooling tower. In a heat recovery application this heat is used for service water, process, or air heating. The RTWD has the capability to produce up to 140°F water, depending on conditions. The tight control also minimizes operating costs for the chilled water plant. There will be less water evaporated at the cooling tower so water is also conserved. There must be a simultaneous heating and cooling load for an efficient heat recovery application.

Figure 1. Heat Recovery

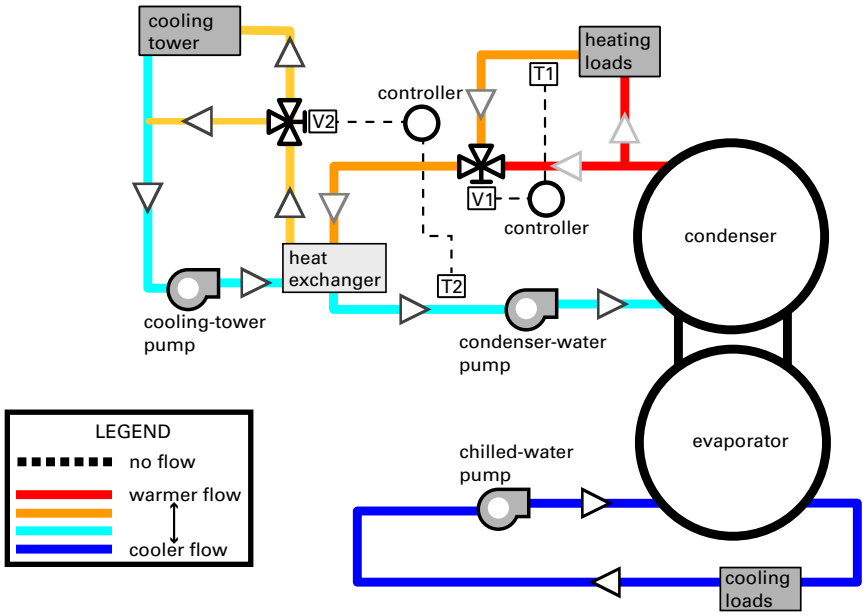

Water to water heat pump

Lower cost and more efficient hot water

With increased use of industrial processes and the rising cost of fossil-fuels it is important to examine new and innovative ways to produce hot water. That rusty old boiler in the mechanical room can be removed to make way for an RTWD chiller. RTWD chillers are being selected to provide heating as a primary function. In this case the operator selects a condenser leaving water temperature control and the chiller capacity adjusts to maintain the hot water setpoint.

Figure 2. Water-to-water heat pump in cooling mode

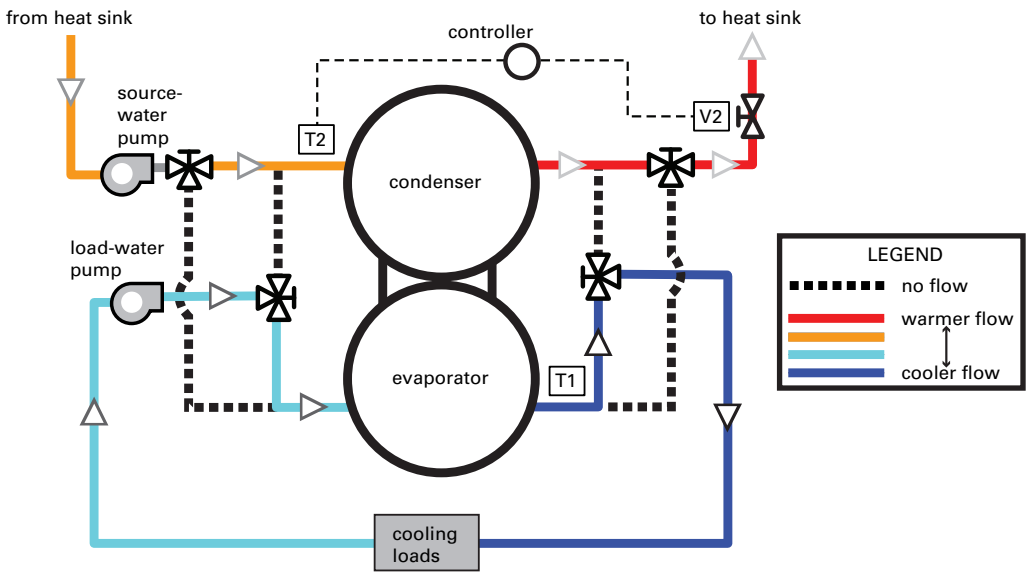

Figure 3. Water-to-water heat pump in heating mode

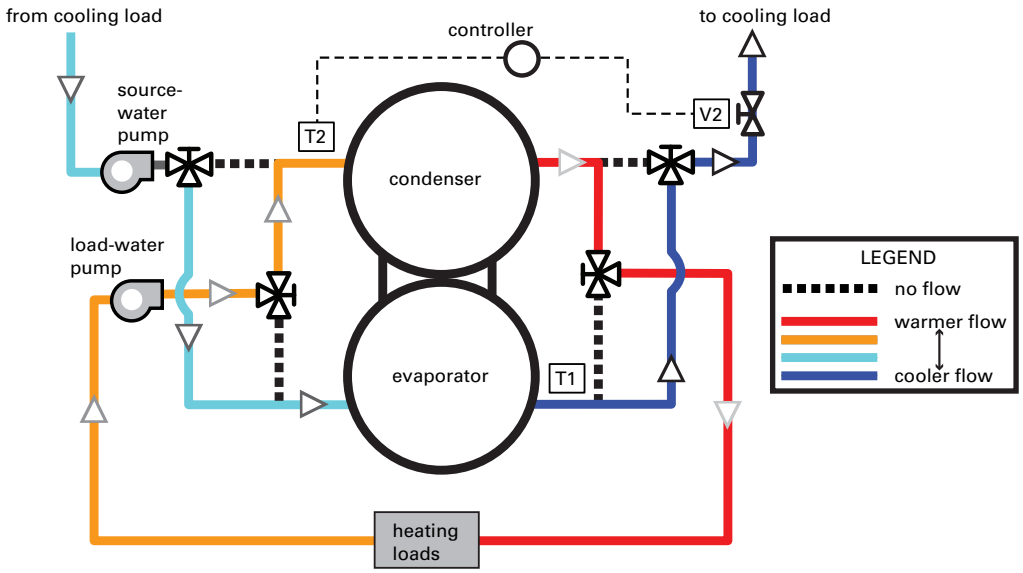

Hot water temperature control

Hot water temperature control is an available option on RTWD chillers.

A feature setting within TechView activates or de-activates the hot water control feature as an option, and sets up the proper Low Level Intelligent Device (LLID), required for operation.

With this option installed, the chiller may be put into heating mode in one of three ways: from an input from Tracer or BAS system, from an external hard wired binary input or from the DynaView front panel.

When the chiller is in the hot water control mode the controls start and stage compressors, and controls leaving condenser water temperature to a hot water setpoint between 80°F and 140°F. In this mode chilled water temperature is not controlled, but is a result of the heating required.

The chilled water temperature differential to start and stop settings are applied to both modes, with opposite signs.

The leaving evaporator water temperature is allowed to drift to as needs to be to satisfy the heating load when the chiller is in the hot water control mode.

Switch over from heating mode to cooling mode, or vice versa, does not require shutting down the chiller.

The hot water temperature control feature is compatible with ice building, however ice building will have priority over hot water control.

Demand limiting is also active during hot water temperature control.

How much can you save?

Efficiency Comparison

A way to compare the efficiencies of water heaters and water to water heat pumps is Coefficient of Performance or COP. That's because COP for a unit that combusts energy includes the losses from combustion. Plus, unlike electricity, it does not have transmission losses. So while it's tempting to compare COPs, a more sophisticated comparison is required. The comparison must include the cost of fuel and electricity and the emissions created by each process. Furthermore, the load profile, time of day and time of year differences could be factored in. COP is equal to the usable heat generated divided by the energy supplied to the equipment. The table below shows typical COP values for three water heating options. COP is a starting point for the analysis that follows.

Table 1. Efficiency Comparison

Energy Source	Equipment	COP
Electric	RTWD - providing cooling	5.0
Electric	RTWD - operation as a heat pump	3.4
Electric	RTWD - providing heating and cooling	8.0
Natural Gas	Boiler	0.8
Electric	Boiler	1.0

Cost Comparison

There is a significant energy savings using a chiller in a water to water heat pump application as shown in the graph. It is important to note that the heat pump COP is dependent on the system design and conditions.

Figure 4. Annual utility cost

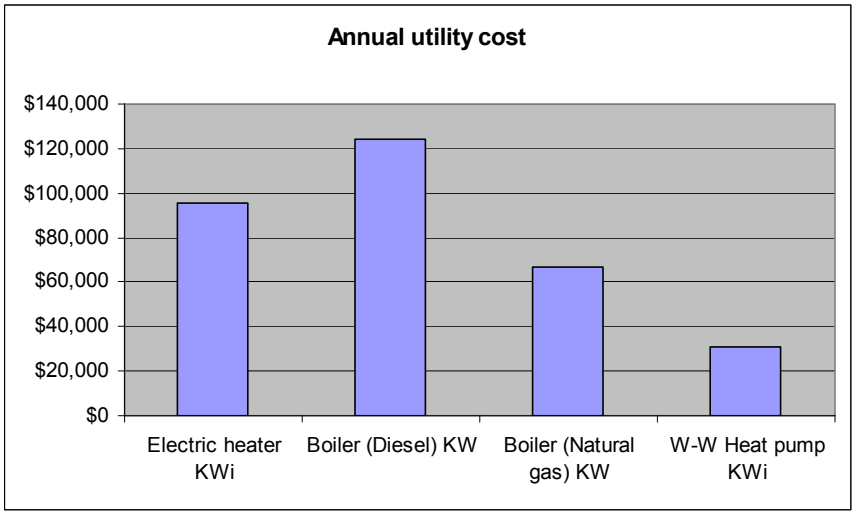

CO2 emissions comparison

Not only does a RTWD cost less to operate it is also better for the environment.

Figure 5. Annual CO_2 emissions

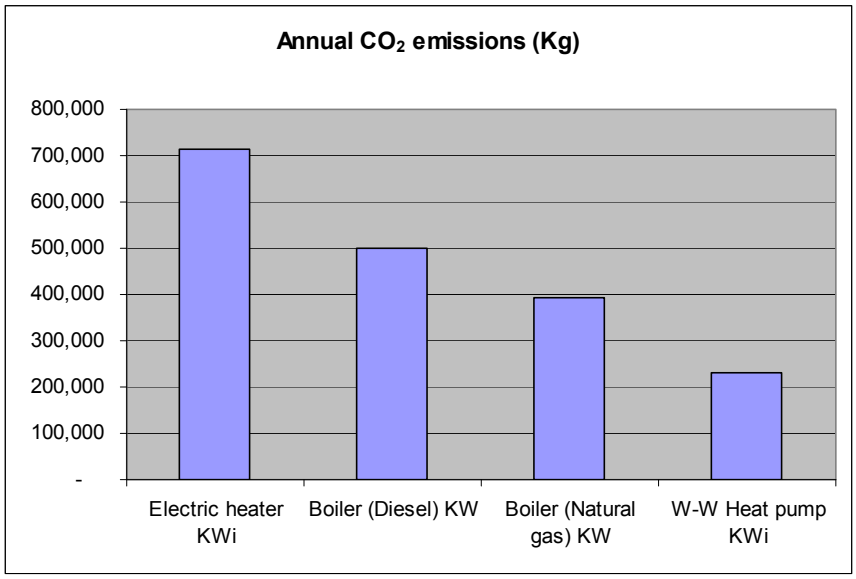

Applications

Heat recovery for heating water

This application includes any heat recovery system installed for heating or preheating water for laundry, swimming pools, domestic hot water or ice melt.

If potable water is being heated, in many locations, an additional heat exchanger is needed since the condenser is not double walled.

Below is an example of a RTWD chiller used for heat recovery in a side stream application.

Figure 6. Heat recovery in a side stream application

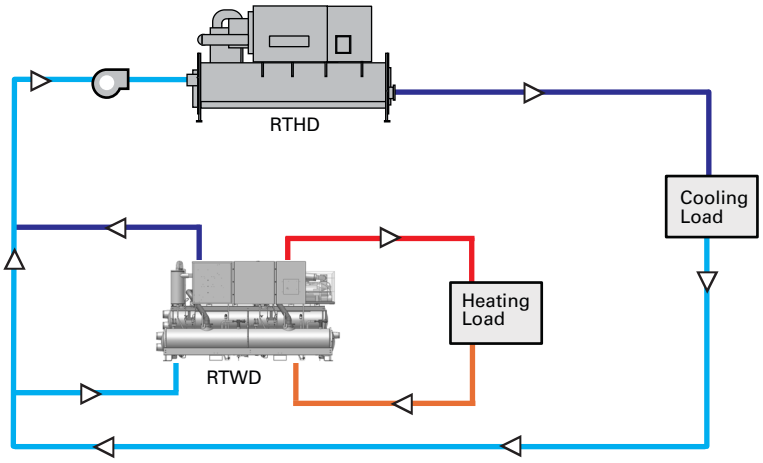

Table 2. Unit Performance data

	RTWD	RTHD
Nominal cooling capacity	90 tons (HE)	C2F2F3
Unit Power	86.50 kW	188.60 kW
Cooling capacity	52.20 tons	299 tons
Full load cooling efficiency	1.569 kW/ton	0.632 kW/ton
Heating capacity	950 MBh	
Full load heating efficiency	3.22 COP	
Combined heating/cooling efficiency	5.46 COP	
Entering/leaving evap temp	56/48	53/40
Number of evap passes	2	3
Evap pressure drop	11.20 ft H_2O	5.80 ft H_2O
Evap flow rate	164 gpm	458 gpm
Evap minimum flow rate	92 gpm	404 gpm
Entering/leaving cond temp	130/140	85/95
Number of cond passes	2	2
Cond pressure drop	10.40 ft H_2O	11.40 ft H_2O
Cond flow rate	193 gpm	850 gpm

Variable air volume reheat

Increasing supply air temperature is a common use for heat recovery and may allow compliance with ASHRAE 90.1 requirements. When controlling humidity reheating of air is needed. The RTWD does a great job in this application.

Figure 7. VAV Reheat

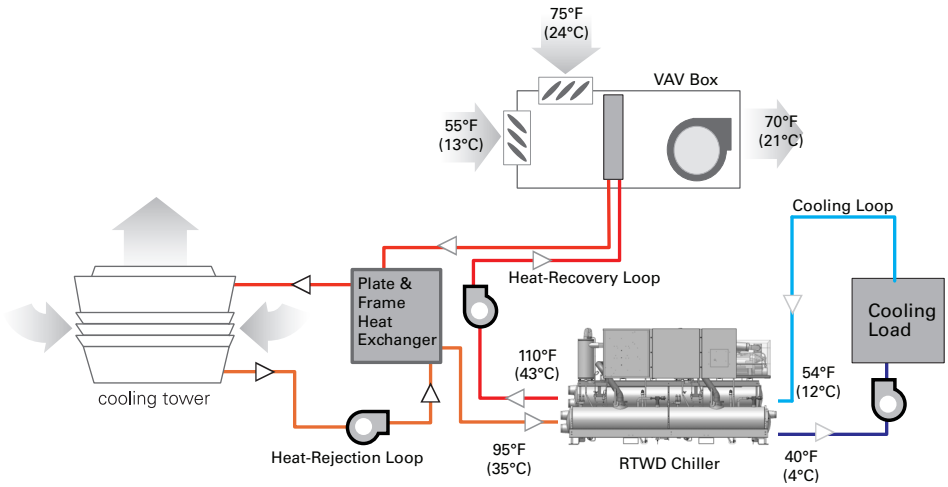

Table 3. Unit Performance data

	RTWD
Nominal capacity	90 tons (HE)
Unit power	79.90 kW
Cooling capacity	82 tons
Full load cooling efficiency	0.980 kW/ton
Heating capacity	1238.7 MBh
Full load heating efficiency	4.54 COP
Combined heating/cooling efficiency	8.14 COP
Entering/leaving evap temp	54/40
Number of evap passes	2
Evap pressure drop	8.70 ft H_2O
Evap gpm	140 gpm
Evap minimum flow rate	92 gpm
Entering/leaving cond temp	95/110
Number of cond passes	2
Cond pressure drop	8.40 ft H_2O
Cond gpm	167 gpm

Water to water heat pump

When an RTWD's primary function is heating it can be controlled based on leaving condenser water temperature. The evaporator leaving water temperature is allowed to drift as the chiller's primary function is to deliver hot water for heating. The leaving evaporator setpoint is ignored however all safeties remain in place. It is important that the evaporator water or solution temperature does not get too cold. The chiller could trip on low evaporator water temperature or low evaporator refrigerant temperature. The evaporator low limit safety will protect the chiller from freezing its evaporator. Alternatively, instead of letting the chiller trip off or move into Adaptive Control Mode if the evaporator gets too cold, the central panel could switch the chiller to leaving chilled water control and let the condenser leaving water float. Supplemental heat from another source may or may not be required at that point. Hot water valves be able to open further and compensate for the slightly cooler hot water. Too hot of a hot water setpoint wastes energy. Hot water reset can prevent the chiller from doing too much heating and experiencing a low evaporator temperature condition.

Figure 8. Water to water heat pump

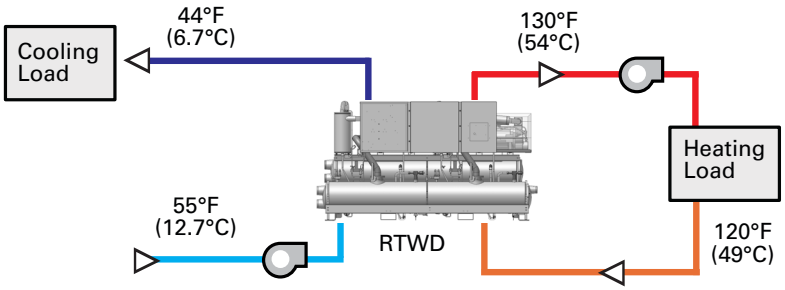

Table 4. Unit Performance data

	RTWD
Nominal capacity	130 tons (HE)
Unit power	138.10 kW
Cooling capacity	106 tons
Full load cooling efficiency	1.309 kW/ton
Heating capacity	1713.1 MBh
Full load heating efficiency	3.63 COP
Combined heating/cooling efficiency	6.31 COP
Entering/leaving evap temp	55/44
Number of evap passes	2
Evap pressure drop	11.00 ft H_2O
Evap gpm	229 gpm
Evap minimum flow rate	130 gpm
Entering/leaving cond temp	120/130
Number of cond passes	2
Cond pressure drop	15.10 ft H_2O
Cond gpm	347 gpm

Heat Recovery and Condensing Boilers

Using an RTWD in conjunction with a condensing boiler is another great heat recovery application for RTWD chillers. A water to water heat pump chiller placed upstream of the return water for the boiler can provide the boiler with a constant supply of hot water.

Condensing boilers are more efficient than non-condensing boilers. The high efficiency is accomplished by capturing the additional heat released from the condensing flue gas. The return water must be below 140°F. The following applications are a great fit for condensing boilers: swimming pools, dedicated water heating, radiant floor heating and snow melt. Condensing boilers are also being used in more traditional comfort heating applications because they are less costly to operate, require less maintenance and hot water systems are easier to control than steam systems. Condensing boilers have been used for many years in Europe.

Standard 90.1 says that the heating system should operate at the lowest possible water temperature, which is limited by the building heating system design. A modest cost increase in hot water coils can make lower temperature hot water heating systems using 130°F with reset to 90°F entering water temperatures feasible in many applications.

Condensing boilers are an environmentally friendly choice and work great with RTWD chillers.

Learn more about water side heat recovery

The following Trane publications have more information on water side heat recovery.

- Applications Manual - SYS-APM005-EN
- ENL Broadcast - 02-21-07 Waterside Heat Recovery
- Engineers Newsletter - ADM-APN023-EN

The following ASHRAE Journal articles have more information on heat recovery:

- Halozan, H. and Rene Rieberer, “Energy-efficient heating and cooling systems for buildings.” http://www.iifiir.org/en/doc/1058.pdf.
- Durkin, T.H. 2006. “Boiler System Efficiency,” ASHRAE Journal 48 (6): pp 51-57.
- Durkin, T.H. and J.B. Rishel. 2003. “Dedicated heat recovery.” ASHRAE Journal 45(10): pp. 18–24.

Literature Order Number	RLC-PRB024-EN
Date	December 2008
Supersedes	RLC-PRB024-EN (Oct 2008)

www.trane.com

For more information, contact your local Trane office or e-mail us at comfort@trane.com