Trane Series
Twenty-four I & Twenty-four II
Active Chilled Beams

3600 Pammel Creek Road
La Crosse, WI 54601
Phone: 608.787.2000

Contents · Description

Trane Twenty-four I and Twenty-four II series
Perforated Face

Installation example

Active chilled beam systems provide comfortable air conditioning of rooms with a high cooling load. They combine the aerodynamic properties of ceiling diffusers with the energy benefits of load dissipation using water.

The low height construction of the Trane Twenty-four I and II facilitates their use in small ceiling cavities. Space savings are also gained as the majority of the cooling is provided by the chilled water coil, therefore the supply and return ductwork is significantly smaller than that required for an equivalent all air system. Active chilled beams are suitable for use in new buildings and are an ideal solution for refurbishment projects where ceiling void space is limited. When connected appropriately, they can be used for both individual room control or from a grouped zone control.

Dependent on the coil configuration and the temperature of the primary air from the AHU, the Trane Twenty-four I and II beams can be used for cooling and/or heating.

Caution!
The chilled water supply temperature provided to the beams coil must be controlled such that it never falls below the room dewpoint of the space, ensuring the beam provides sensible cooling only. Chilled beams should not be selected to condense.

The primary air that is fed to the beams must be pretreated at the AHU to maintain ventilation and humidity control of the space and usually contributes to the sensible cooling of the space.

Active chilled beams should be regarded as terminal outlets and therefore must be selected not just for cooling and heating capacity, but also for occupant thermal comfort and acceptable noise levels.

Functional description

Active chilled beams supply conditioned fresh air (primary air) to the space from a central plant room to maintain indoor air quality while providing additional cooling and/or heating using heat exchangers.

Primary air is ducted to the upper air chamber via a side, top or end inlet. The primary air is then discharged via nozzles to a lower section containing a 2- or 4-pipe heat exchanger coil. This causes room air to be induced, via the central perforated face panel, up and through the heat exchanger coil. The cooled (or heated) room air is then blended with the primary air before the mixed air is delivered into the room via single (1-way) or dual (2-way) air distribution slots.

With four nominal lengths and three nozzle options, the optimum selection to meet fresh airflow rate and thermal capacity requirements while exhibiting low differential pressures and sound power level characteristics can be selected.

There are two types of heat exchanger available — a 2-pipe system for cooling and a 4-pipe system for cooling and heating.

For maintenance, the induction grille can be removed completely by releasing four bolts to gain access to the heat exchanger coils. Lanyard wires attached to the induction grille provide additional safety.

Principle of operation
Top-entry inlet connection

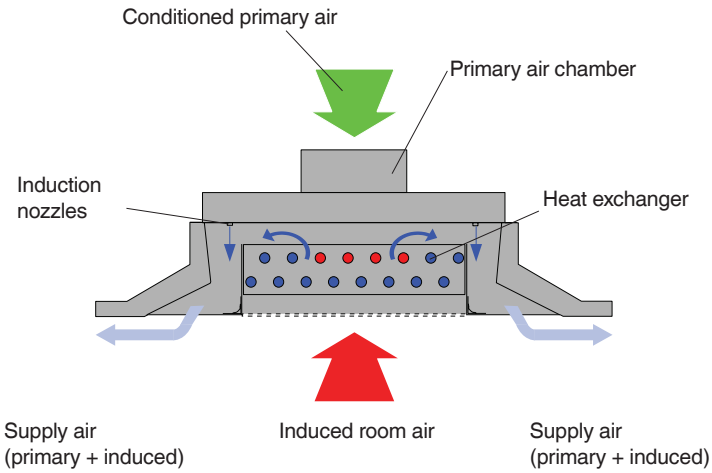

The beam uses the primary air energy to induce air through the coil; it does not contain any moving parts, fans or motors.

CBCA for ceiling mounting

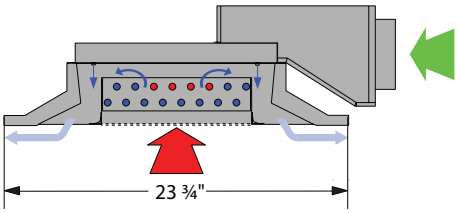

CBWA for exposed mounting

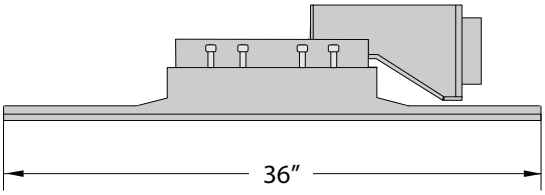

Model CBCA

1. Primary air plenum
2. Primary air inlet, side-entry
3. Induction nozzles
4. Discharge slots
5. Induction grille (perforated face)
6. Coils (heat exchanger)
7. Discharge nozzles

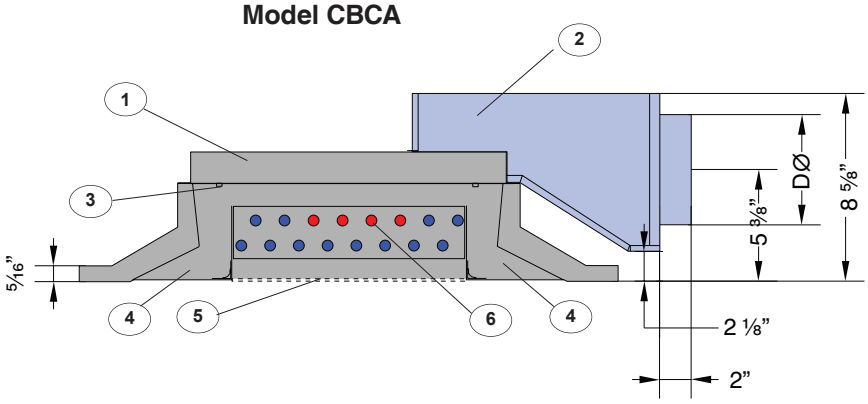

- Chilled water
- Warm water

Dimensional data

Characteristics
- Fresh air range 15 to 175 cfm
- For clear room heights from approximately 8 to 14 ft.
- Flush ceiling installation
- Side, top or end-entry primary air connection
- Lengths of 4, 6, 8 and 10ft (other lengths on request)
- Nozzles in three sizes to optimise induction
- Heat exchangers for two- or four-pipe systems
- Maximum operating pressure: 90 psi
- Maximum operating temperature: 165˚F
  (other operating pressures and temperatures upon request)

Construction features
- Primary air connections suitable for circular connecting ducts
- Safety wires to support the induction grille
- Water connections ½" on coil as standard (male NPT option available)
- Side-entry primary air connection (standard)
- Top-entry primary air connection (standard)
- End-entry primary air connection (standard)

Materials
Casing, which includes the top primary chamber and the lower coil housing, are made of steel sheet. The induction nozzles are precision stamped into the underside of the primary air chamber. The perforated induction grille is made from steel sheet. The border frame and induction grille frame are made from aluminum. The front face sections are made from pressed steel sections. The standard finish on the face section containing the induction grille is powder-coated white (RAL 9010) as standard. The top casing (plenum) and primary air inlet are powder-coated black (RAL 9005) as standard.

The heat exchanger, which consists of copper tubes with formed aluminum fins, is untreated.

Dimensions

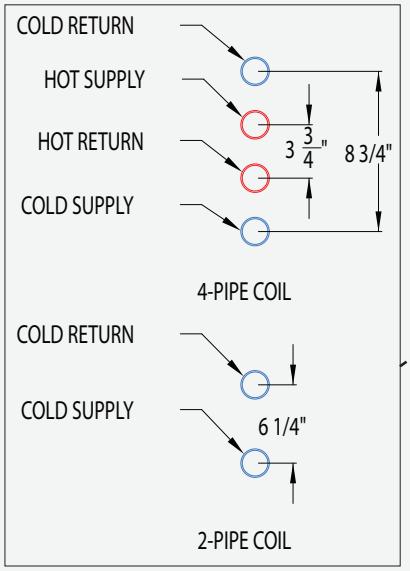

Beam shown: CBCA422ZS5WN

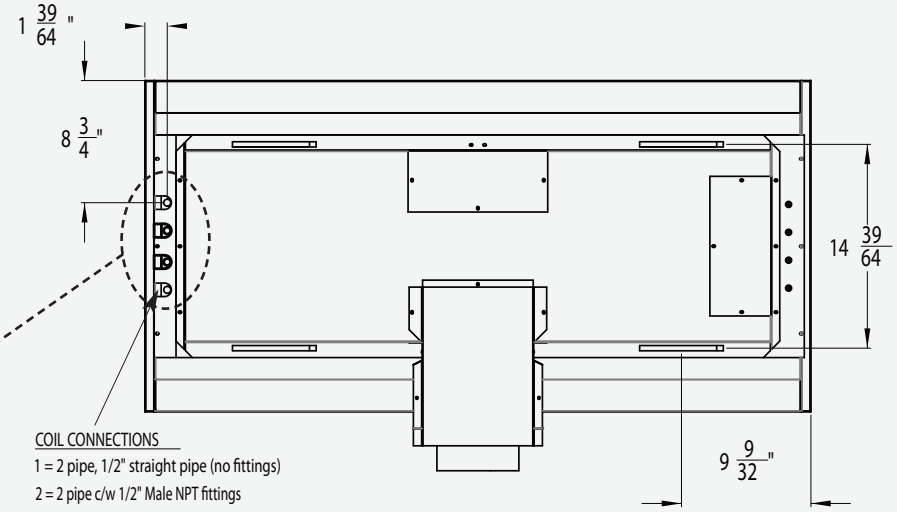

COIL CONNECTIONS
1 = 2 pipe, 1/2" straight pipe (no fittings)
2 = 2 pipe c/w 1/2" Male NPT fittings
Chilled water flow rate above 1.49 GPM on 4' long,
1.24 GPM on 6', 1.09 GPM on ~~8'~~ and 0.99 GPM on 10'
3 = 2 pipe high flow, 1/2" straight pipe (no fittings)
4 = 2 pipe high flow c/w 1/2" Male NPT fittings
5 = 4 pipe, 1/2" straight pipe (no fittings)
6 = 4 pipe c/w 1/2" Male NPT fittings
Chilled water flow rate above 1.49 GPM on 4' long,
1.24 GPM on 6', 1.09 GPM on 8' and 0.99 GPM on 10'
7 = 4 pipe high flow, 1/2" straight pipe (no fittings)
8 = 4 pipe high flow c/w 1/2" Male NPT fittings

Dimensions - Twenty-four II CBCA

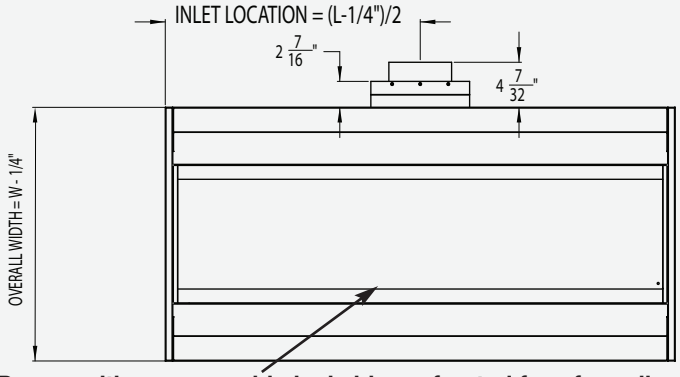

Dimensions - Twenty-four II CBWA

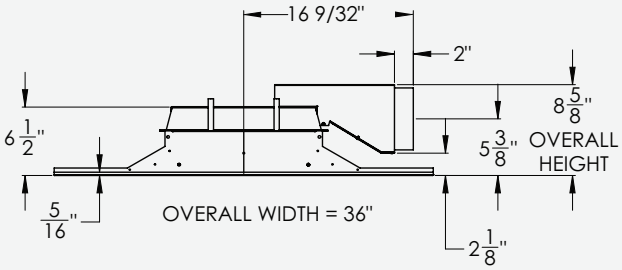

Beams with a removeable lockable perforated face for coil access

Trane Twenty-four I & II Model
Arrangement of diffuser face and active section

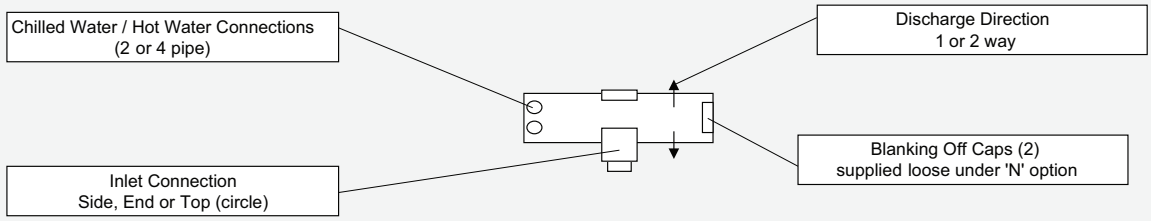

Coil configuration / Connection handings: 2-Way Air Connection options (top view)

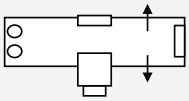

Air Connection 'S'

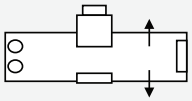

Air Connection 'R'

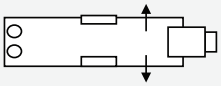

Air Connection 'E'

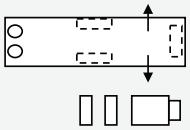

Air Connection 'N'
Side inlet and cover plates supplied loose

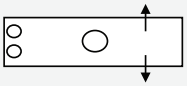

Air Connection 'T'

Coil configuration / Connection handings: 1-Way Air Connection options (top view)

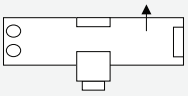

Air Connection 'S'

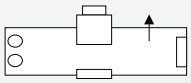

Air Connection 'R'

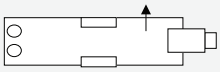

Air Connection 'E'

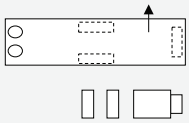

Air Connection 'N'
Side inlet supplied loose

Air Connection 'T'

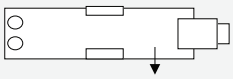

Air Connection 'G'

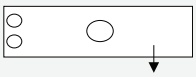

Air Connection 'Y'

- All water connections are ½″ plain ends as standard
- Male NPT fittings are an available option

Installation

The Trane Twenty-four I and II model beams should be separately suspended from the structure above by means of building code approved wire or metal rods that allow the beam's position to be vertically adjusted. Beams are usually mounted and connected prior to the installation of the ceiling grid. The Trane Twenty-four I and II model beams are provided with two slots along both sides of the beam's length allowing attachment of mounting hardware and brackets (not provided). It is recommended that the beams be suspended from a secondary linear grid (lateral adjustment kit) that runs perpendicular to the beam's length, providing full adjustability in every direction and allowing the beam to be positioned into the supended ceiling grid.

The induction grille is secured by two safety cables. To gain access to the heat exchanger coils the induction grille can be removed completely by releasing all four fixing bolts. Health and Safety Regulations should be noted when removing the induction grille.

The coil connections are on the outside of the Trane Twenty-four I and II model beams. They can be plain-ended for soldered connections or provided with ½" male NPT fittings for connection with flexible hoses.

The air must be connected to the primary air inlet connection which can be side, end or top-entry.

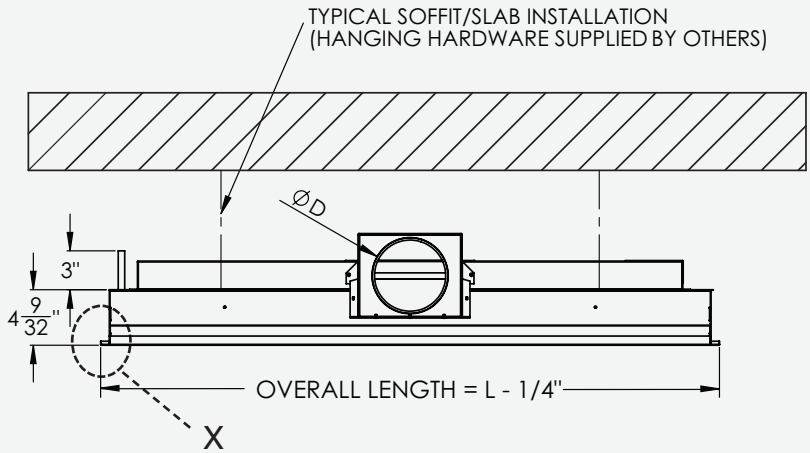

Installation in T-bar ceiling Detail X

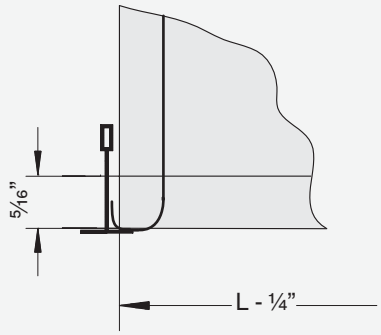

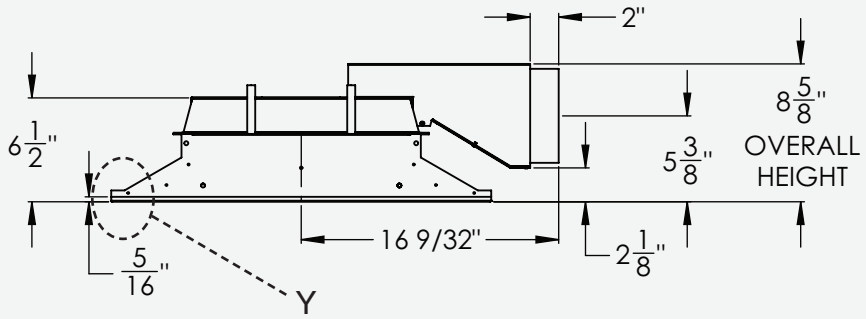

Installation in T-bar ceiling Detail Y

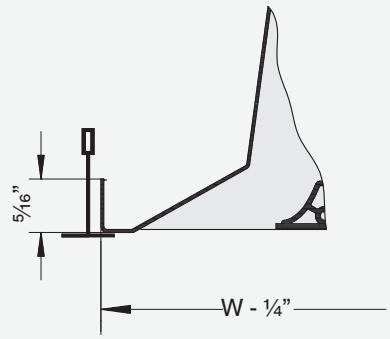

Induction grille fixing bolts

Four fixing bolts hold the induction grille in place

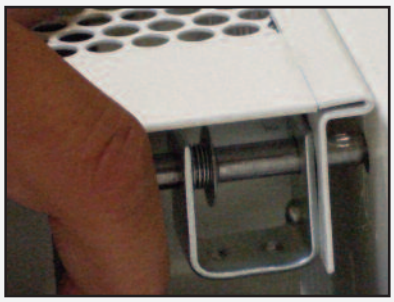

To remove the grille completely, pull-back and release all four fixing bolts

The beam's coil can now be accessed easily for maintenance

Depending on the quality of the room air, there is the possibility of dust deposits as with all room air induction units. If necessary, the unit can be cleaned with ordinary, non-abrasive household cleaners. The coil can be cleaned with an industrial vacuum cleaner.

Nomenclature · Performance notes

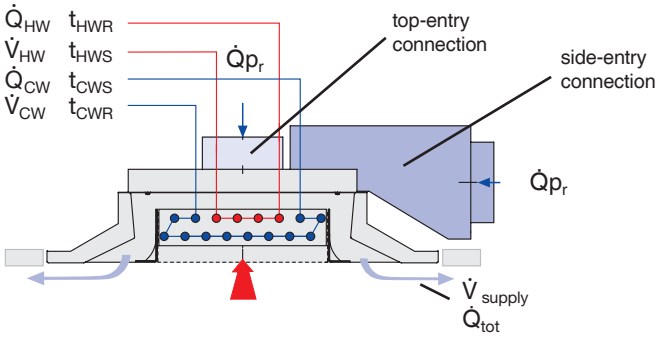

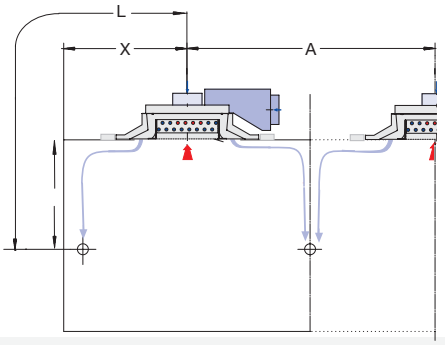

$\dot{Q}_{SEN}$	in	Btu/h:	Space sensible load
$\dot{Q}_{LAT}$	in	Btu/h:	Space latent load
$\dot{V}_{LAT}$	in	cfm:	Primary airflow rate to offset space latent gains
$\dot{V}_{HW}$	in	gpm:	Water volume flow rate, heating
$\dot{V}_{CW}$	in	gpm:	Water volume flow rate, cooling
$\dot{V}_{supply}$	in	cfm:	Discharge flow rate
$\dot{Q}p_r$	in	Btu/h:	Primary air cooling capacity
$\dot{Q}_{HW}$	in	Btu/h:	Water heating capacity
$\dot{Q}_{CW}$	in	Btu/h:	Water cooling capacity
$\dot{Q}_{tot}$	in	Btu/h:	Total beam thermal capacity
W_{ROOM}	in	gr:	Room humidity ratio
Wp_r	in	gr:	Primary air humidity ratio
Δw	in	gr:	Difference between room and primary air humidity ratio
Δt_{Pr}	in	°F:	Difference between room air and primary air temperature
Δt_W	in	°F:	Supply to return water temperature difference
Δt_{RW}	in	°F:	Difference between room air and water supply temperature
Δp_t	in	in. H_20:	Air pressure drop
Δp_W	in	ft. H_20:	Water pressure drop
t_R	in	°F:	Room temperaturea
t_{HWS}	in	°F:	Water supply temperature, heating
t_{HWR}	in	°F:	Water return temperature, heating
t_{CWS}	in	°F:	Water supply temperature, cooling
t_{CWR}	in	°F:	Water return temperature, cooling
$\bar{v}_L$	in	fpm:	Air velocity distance L
$\bar{v}_{H1}$	in	fpm:	Air velocity distance H_1
A	in	ft:	Spacing between two diffusers with opposing blow patterns
L	in	ft:	Horizontal and vertical distance ($x+H_1$) discharge to the wall
H_1	in	ft:	Distance from ceiling to occupied zone (5´ 6˝ above the floor)
Δt_o	in	ft:	Temperature difference room air and beam discharge temperature

Beam Length ft	For Other Chilled Water Flow Rates	Chilled Water Flow Rate, GPM								
		0.50	0.75	1.00	1.25	1.50	1.75	2.00	2.25	2.40
4	*Multiply q_{CW} by*	0.83	0.94	1.00	1.01	1.02	1.04	1.05	1.06	1.07
	Multiply ΔP_{WATER} by	0.28	0.59	1.00	1.50	0.63	0.84	1.07	1.33	1.49
6	*Multiply q_{CW} by*	0.80	0.93	1.00	1.01	1.04	1.06	1.08	1.10	1.11
	Multiply ΔP_{WATER} by	0.29	0.70	1.00	0.45	0.63	0.83	1.05	1.31	1.47
8	*Multiply q_{CW} by*	0.83	0.96	1.00	1.03	1.06	1.08	1.09	1.10	1.11
	Multiply ΔP_{WATER} by	0.29	0.60	1.00	0.45	0.62	0.82	1.05	1.29	1.45
10	*Multiply q_{CW} by*	0.75	0.90	1.00	1.03	1.08	1.11	1.13	1.15	1.17
	Multiply ΔP_{WATER} by	0.29	0.60	1.00	0.45	0.62	0.82	1.04	1.29	1.44

Table 1: Correction Factors for Chilled Water Flow Rate

Useful equations:

$$\dot{Q}p_r = 1.09 \times \dot{V}_{Pr} \times (t_R - t_{Pr})$$
$$\Delta t_W = \dot{Q}_{W_K} / (500 \times \dot{V}_{CW})$$

For Other Room and Chilled Water Supply Temperatures	$T_{ROOM} - T_{CWS}$, °F								
	12	13	14	15	16	17	18	19	20
Multiply q_{CW} by	0.67	0.72	0.78	0.83	0.89	0.94	1.00	1.06	1.11

Table 2: Correction Factors for Room to Chilled Water Temperature Differential

Beam Length ft	For Other Hot Water Flow Rates	Hot Water Flow Rate, GPM					
		0.25	0.50	0.75	1.00	1.25	1.50
2 thru 10	*Multiply q_{HW} by*	0.53	0.78	0.92	1.00	1.05	1.09
	Multiply ΔP_{WATER} by	0.06	0.25	0.56	1.00	1.56	2.25

Table 3: Correction Factors for Hot Water Flow Rate

For Other Room and Hot Water Supply Temperatures	$T_{HWS} - T_{ROOM}$, °F								
	30	35	40	45	50	55	60	65	70
Multiply q_{CW} by	0.60	0.70	0.80	0.90	1.00	1.10	1.20	1.30	1.40

Table 4: Correction Factors for Room to Hot Water Temperature Differential

Quick selection table
Twenty-four II (2-way) chilled beam

Reference Values - Cooling

t_R	75 °F
t_{Pr}	55 °F
t_{cws}	57 °F
$\dot{V}_{CW}$	1.00 GPM

Reference Values - Heating

t_R	75 °F
t_{Pr}	55 °F
t_{HWS}	125 °F
$\dot{V}_{HW}$	1.00 GPM

Table based on Trane Twenty-four II (2-way) model beam with 50% free-area perforated face

Nominal Length L_N	Nozzle Type	Primary Air			Cooling				Heating		Isothermal Throw [6]	NC[7]
					Two pipe system		Four pipe system		Four pipe system			
		V_{Pr}	Δp_t	Q_{Pr} [1]	Q_{CW} [2]	Δp_W [3]	Q_{CW} [2]	Δp_W [3]	Q_{HW} [4,5]	Δp_W [3]		
ft		CFM	in. H_2O	btuh	btuh	ft. H_2O	btuh	ft. H_2O	btuh	ft. H_2O	ft	
4	Z	15	0.22	327	985	5.1	924	4.1	1,950	1.4	2-3-4	<15
		20	0.40	436	1,337		1,258		2,663		3-4-5	<15
		25	0.62	545	1,601		1,505		3,202		3-4-5	17
		30	0.90	654	1,810		1,703		3,633		3-4-7	28
	M	20	0.18	436	1,096		1,028		2,172		2-3-4	<15
		28	0.36	610	1,530		1,438		3,057		3-4-5	<15
		36	0.59	785	1,841		1,732		3,697		3-4-6	21
		44	0.88	959	2,080		1,959		4,195		4-5-8	26
	G	40	0.20	872	1,547		1,454		3,091		3-4-6	19
		55	0.37	1,199	1,981		1,865		3,988		4-5-8	27
		70	0.61	1,526	2,295		2,163		4,645		5-6-11	34
		85	0.89	1,853	2,539		2,395		5,161		5-7-12	39
6	Z	21	0.19	458	1,290	7.1	1,211	5.7	2,567	1.9	2-3-4	<15
		28	0.33	610	1,814		1,707		3,642		3-4-5	<15
		35	0.52	763	2,199		2,072		4,444		3-4-6	18
		42	0.75	916	2,500		2,358		5,078		4-5-7	23
	M	30	0.17	654	1,576		1,482		3,151		2-3-4	<15
		42	0.34	916	2,208		2,081		4,463		4-5-7	18
		54	0.57	1,177	2,650		2,500		5,396		4-5-9	25
		66	0.85	1,439	2,985		2,820		6,115		4-6-8	30
	G	60	0.19	1,308	2,224		2,095		4,496		3-4-6	18
		80	0.34	1,744	2,782		2,626		5,678		4-5-9	26
		100	0.53	2,180	3,188		3,014		6,554		5-6-11	32
		120	0.76	2,616	3,504		3,317		7,244		5-7-12	37
8	Z	30	0.21	654	1,830	9.0	1,721	7.2	3,674	2.4	2-3-4	<15
		40	0.38	872	2,491		2,349		5,058		3-4-5	15
		50	0.60	1,090	2,967		2,803		6,076		3-4-7	21
		60	0.86	1,308	3,335		3,155		6,875		4-5-8	26
	M	45	0.22	981	2,320		2,186		4,697		2-3-5	<15
		60	0.39	1,308	2,987		2,822		6,118		3-4-6	22
		75	0.61	1,635	3,466		3,281		7,160		4-5-7	28
		90	0.88	1,962	3,836		3,635		7,976		5-6-9	33
	G	75	0.17	1,635	2,681		2,531		5,464		4-5-7	19
		100	0.29	2,180	3,389		3,206		6,991		4-6-8	27
		125	0.46	2,725	3,894		3,691		8,105		5-6-9	33
		150	0.66	3,270	4,281		4,064		8,973		5-7-16	38
10	Z	40	0.24	872	2,404	10.9	2,267	8.8	4,875	2.9	2-3-5	<15
		50	0.38	1,090	3,008		2,843		6,165		3-4-5	19
		60	0.55	1,308	3,468		3,283		7,166		3-4-6	23
		70	0.75	1,526	3,836		3,636		7,977		4-5-8	27
	M	50	0.17	1,090	2,457		2,317		4,987		3-4-5	15
		70	0.34	1,526	3,407		3,224		7,032		4-5-7	23
		90	0.56	1,962	4,045		3,836		8,442		4-5-9	30
		110	0.84	2,398	4,515		4,290		9,503		5-7-12	35
	G	100	0.19	2,180	3,420		3,237		7,060		4-5-7	26
		125	0.29	2,725	4,051		3,842		8,455		5-6-9	32
		150	0.42	3,270	4,527		4,301		9,529		5-7-11	37
		175	0.58	3,815	4,904		4,667		10,395		6-8-12	41

PERFORMANCE NOTES:

[1] $\dot{Q}_{Pr}$ is the sensible cooling provided by primary air 20°F below room temperature at the flow rate indicated.
[2] $\dot{Q}_{CW}$ is coil sensible cooling using 1.00 GPM of chilled water supplied 18°F below the room temperature.
[3] Δp_W is the water head loss at a supply flow rate of 1.00 GPM.
[4] $\dot{Q}_{HW}$ is coil heating using 1.00 GPM of hot water supplied 50°F above the room temperature.
[5] Heating coil output must be corrected for primary air cooling (or heating) contribution ($\dot{Q}_{Pr}$) to estimate net heating provided to the space.
[6] isothermal throw values presented are to 150, 100 and 50 FPM, respectively.
[7] NC values are based on a room absorption of 10 dB (per octave band) re 10^{-12} watts.

See Tables 1 through 4 on page 7 for correction factors for water flow rates and/or room to water temperature differentials other than those specified above.

Quick selection table
Twenty-four I (1-way) chilled beam

Reference Values - Cooling

t_R	75 °F
t_{Pr}	55 °F
t_{cws}	57 °F
$\dot{V}_{CW}$	1.00 GPM

Reference Values - Heating

t_R	75 °F
t_{Pr}	55 °F
t_{HWS}	125 °F
$\dot{V}_{HW}$	1.00 GPM

Table based on Trane Twenty-four I (1-way) model beam with 50% free-area perforated face

Nominal Length L_N	Nozzle Type	Primary Air			Cooling				Heating		Isothermal Throw [6]	NC[7]
					Two pipe system		Four pipe system		Four pipe system			
		V_{Pr}	Δp_t	Q_{Pr} [1]	Q_{CW} [2]	Δp_W [3]	Q_{CW} [2]	Δp_W [3]	Q_{HW} [4,5]	Δp_W [3]		
ft		CFM	in. H_2O	btuh	btuh	ft. H_2O	btuh	ft. H_2O	btuh	ft. H_2O	ft	
4	Z	8	0.25	174	602	5.1	564	4.1	1,184	1.4	2-3-4	<15
		10	0.40	218	761		713		1,501		3-4-5	<15
		13	0.67	283	944		885		1,868		3-4-5	<15
		15	0.90	327	1,042		978		2,065		3-4-7	<15
	M	10	0.18	218	619		580		1,219		2-3-4	<15
		14	0.36	305	875		820		1,729		3-4-5	<15
		18	0.59	392	1,061		996		2,103		3-4-6	<15
		22	0.88	480	1,207		1,133		2,398		4-5-8	<15
	G	20	0.20	436	885		830		1,748		3-4-6	<15
		28	0.39	610	1,161		1,089		2,305		4-5-8	<15
		35	0.61	763	1,339		1,257		2,666		5-6-11	20
		43	0.91	937	1,500		1,410		2,995		5-7-12	25
6	Z	11	0.21	240	784	7.1	735	5.7	1,547	1.9	2-3-4	<15
		14	0.33	305	1,045		981		2,071		3-4-5	<15
		18	0.55	392	1,309		1,229		2,605		3-4-6	<15
		21	0.75	458	1,467		1,378		2,927		4-5-7	<15
	M	15	0.17	327	902		846		1,784		2-3-4	<15
		21	0.34	458	1,286		1,207		2,557		4-5-7	<15
		27	0.57	589	1,561		1,467		3,119		4-5-9	<15
		33	0.85	719	1,774		1,669		3,559		4-6-8	18
	G	30	0.19	654	1,295		1,216		2,577		3-4-6	<15
		40	0.34	872	1,644		1,546		3,291		4-5-9	17
		50	0.53	1,090	1,905		1,793		3,830		5-6-11	24
		60	0.76	1,308	2,112		1,989		4,262		5-7-12	29
8	Z	15	0.21	327	1,054	9.0	989	7.2	2,090	2.4	2-3-4	<15
		20	0.38	436	1,461		1,372		2,915		3-4-5	<15
		25	0.60	545	1,763		1,658		3,535		3-4-7	<15
		30	0.86	654	2,001		1,884		4,030		4-5-8	15
	M	23	0.23	501	1,387		1,303		2,764		2-3-5	<15
		30	0.39	654	1,775		1,670		3,561		3-4-6	<15
		38	0.62	828	2,105		1,982		4,247		4-5-7	16
		45	0.88	981	2,333		2,199		4,726		5-6-9	20
	G	38	0.17	828	1,602		1,506		3,205		4-5-7	<15
		50	0.29	1,090	2,036		1,917		4,103		4-6-8	19
		63	0.47	1,373	2,384		2,247		4,833		5-6-9	25
		75	0.66	1,635	2,636		2,488		5,368		5-7-16	30
10	Z	20	0.24	436	1,407	11.0	1,321	8.8	2,804	2.9	2-3-5	<15
		25	0.38	545	1,789		1,683		3,590		3-4-5	<15
		30	0.55	654	2,089		1,967		4,212		3-4-6	<15
		35	0.75	763	2,333		2,199		4,726		4-5-8	17
	M	25	0.17	545	1,440		1,353		2,872		3-4-5	<15
		35	0.34	763	2,048		1,929		4,128		4-5-7	<15
		45	0.56	981	2,474		2,334		5,024		4-5-9	19
		55	0.84	1,199	2,799		2,643		5,715		5-7-12	24
	G	50	0.19	1,090	2,057		1,937		4,146		4-5-7	17
		63	0.30	1,373	2,493		2,351		5,064		5-6-9	24
		75	0.42	1,635	2,807		2,650		5,732		5-7-11	28
		88	0.58	1,918	3,083		2,914		6,327		6-8-12	33

PERFORMANCE NOTES:

[1] $\dot{Q}_{Pr}$ is the sensible cooling provided by primary air 20°F below room temperature at the flow rate indicated.
[2] $\dot{Q}_{CW}$ is coil sensible cooling using 1.00 GPM of chilled water supplied 18°F below the room temperature.
[3] Δp_W is the water head loss at a supply flow rate of 1.00 GPM.
[4] $\dot{Q}_{HW}$ is coil heating using 1.00 GPM of hot water supplied 50°F above the room temperature.
[5] Heating coil output must be corrected for primary air cooling (or heating) contribution ($\dot{Q}_{Pr}$) to estimate net heating provided to the space.
[6] isothermal throw values presented are to 150, 100 and 50 FPM, respectively.
[7] NC values are based on a room absorption of 10 dB (per octave band) re 10^{-12} watts.

See Tables 1 through 4 on page 7 for correction factors for water flow rates and/or room to water temperature differentials other than those specified above.

Selection program description

Selection Software

For detailed selections designers may contact their local Trane office to request selection software for the Trane Twenty-four I & II model chilled beams. Available for all types of beams, this software (see sample below) affords easy access to the beams' performance data against user defined parameters.

User defined input parameters include:
- Beam length and nozzle type
- Water flow rates and supply temperatures
- Primary airflow rate and temperature
- Room temperature and RH%
- Room height, beam spacing and distance to walls and occupied zone height

Upon entry of these parameters, the software returns values for:
- Air and water pressure requirements
- Sensible cooling and/or heating capacity
- Water temperature rises and/or drops
- Resultant noise (NC) levels
- Local velocities and temperatures (based on non-isothermal supply air) along adjacent walls and at a point where the airstream enters the occupied zone beneath two colliding airstreams (from beams with opposing discharges).

In addition, these programs caution (see red text in exhibit below) the user when unusual pressure losses or excessive occupied zone velocities result from the selection. The program also warns the user when a chilled water temperature is specified which is below the dew point temperature of the space.

These selection programs also include a feature that allows the user to save the selection in an Excel spreadsheet that allows it and all of its calculated performance to be exported directly to the project schedule.

NOTE: Macros must be enabled for the spreadsheet to function.

Twenty-Four II - Two Way Active Chilled Beam Selection Program

Input Parameters	4 pipe coil		2 pipe coil	
	cooling	heating	cooling	heating
Vwater (GPM)	1.00 GPM	1.00 GPM	1.00 GPM	1.00 GPM
Unit length	8.0 ft			
Nozzle-type	Z			
Vair-primary (CFM)	50.0 CFM			
Inlet Diameter	5.0 inches			

Project	Room-No.	Comment

Input Temperatures	cooling		heating	
Tair-primary EAT)	55.0 ℉		55.0 ℉	
Troom / rel. Humidity	75.0 ℉	50.0 %	75.0 ℉	50.0 %
Twater-flow (EWT)	57.0 °F		125.0 °F	

Input Mounting Height and Beam Spacing	
Mounting Height (H)	8.5 ft
Beam Spacing (A)	8.0 ft
Distance to Wall (X)	7.0 ft
Occupied Zone Height (OZ)	5.5 ft

Results	4 pipe coil		2 pipe coil	
	cooling	heating	cooling	heating
Twater-return (LWT)	62.6 ℉	112.9 ℉	62.9 ℉	108.4 ℉
Qwater	-2803 BTUH	6076 BTUH	-2967 BTUH	8326 BTUH
Qair	-1090 BTUH	-1090 BTUH	-1090 BTUH	-1090 BTUH
Qtotal	-3893 BTUH	4987 BTUH	-4057 BTUH	7236 BTUH
ΔP water	7.217 ft WG	2.367 ft WG	9.016 ft WG	8.218 ft WG
ΔP air	0.60 inches WG			
NC (incl. 10 dB absorbtion)	21			

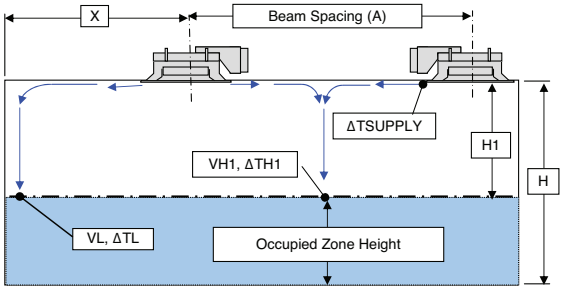

Microsoft Excel Macros must be enabled in order for this program to function.

Terminal Velocities and Temperatures				
vL2 (measured 2" from wall)	86 FPM	64 FPM	87 FPM	60 FPM
vL6 (measrured 6" from wall)	52 FPM	39 FPM	52 FPM	36 FPM
vH1	44 FPM		44 FPM	
ΔTL	-1.0 ℉	0.7 ℉	-1.1 ℉	1.0 ℉
ΔTH1	-0.3 °F		-0.3 °F	
ΔTsupply	-11.2 ℉	14.3 ℉	-11.6 ℉	20.7 ℉
Coil Type	Standard Water Coil		Standard Water Coil	

Care must be taken to ensure that the combination of the temperature differentials at ΔTH1 and velocities at VH1 do not exceed the recommended 20% discomfort curve as stated by the ASHRAE Handbook and as shown in the User Notes. Care should also be taken with respect to the velocities down internal walls, where objects (e.g. desk, cabinets, shelves, etc) are likely to redirect the air stream into the occupied zone, at which point velocities vL2 and temperature differential ΔTL must also be considered.

Version A.1 (9/17/2010)

Text in red represents a value that is not generally recommended (see user notes for details).

Room air distribution with active chilled beams

Active chilled beams distribute air within the room in a manner consistent with that of linear slot diffusers. As such, the relationship between air stream terminal velocities and thermal decay of the supply air stream that applies to linear slot diffusers also applies to active chilled beams. Upon discharge to the open space, velocity and temperature differentials between the supply air mixture and the room begin to diminish due to room air entrainment. As with linear slot, chilled beams exhibit relatively long throw characteristics and their velocity and temperature differentials diminish at a rate that is directly proportional to the distance the air has traveled within the space.

Most manufacturers present throw data using isothermal air for terminal velocities of 150, 100 and 50 FPM. This data can be used to map the airstream and predict the local velocity at the point where it enters the occupied zone. As the room to supply air differential decays at a similar rate, its temperature can also be predicted at the entry point based on the initial temperature difference (Δt_o) between the beam discharge temperature and that of the room into which it is introduced.

TRANE selection software can be used to predict the value of local velocities and temperatures at critical locations where the air stream enters the occupied zone.

As the region near outside walls is not defined as part of the occupied zone, local velocities and temperatures do not generally affect occupant thermal comfort. Care should still be taken that velocities down walls are not so high they affect processes (e.g. fume hoods) and on outer walls, they are sufficient to provide adequate heating where applicable.

The area of greatest draft risk usually occurs directly below the point where two opposing airstreams collide. Figure 1 below indicates that at a temperature difference of 1.25° (ie. air is 1.25° cooler than the occupied space temperature measuring point) the velocity ($\bar{v}_{H1}$) entering the occupied zone below the collision point must generally be 50 FPM or less to prevent draft complaints by more than 20% of the occupants. Throw mapping techniques can be used to determine the minimum centerline spacing of those beams that will limit the velocity ($\bar{v}_{H1}$) entering the occupied zone to 50 FPM or less. The selection example that follows illustrates the use of mapping to determine the minimum beam spacing. Other temperature differences can also be used to vary the air velocity to keep draft complaints under the 20% criteria.

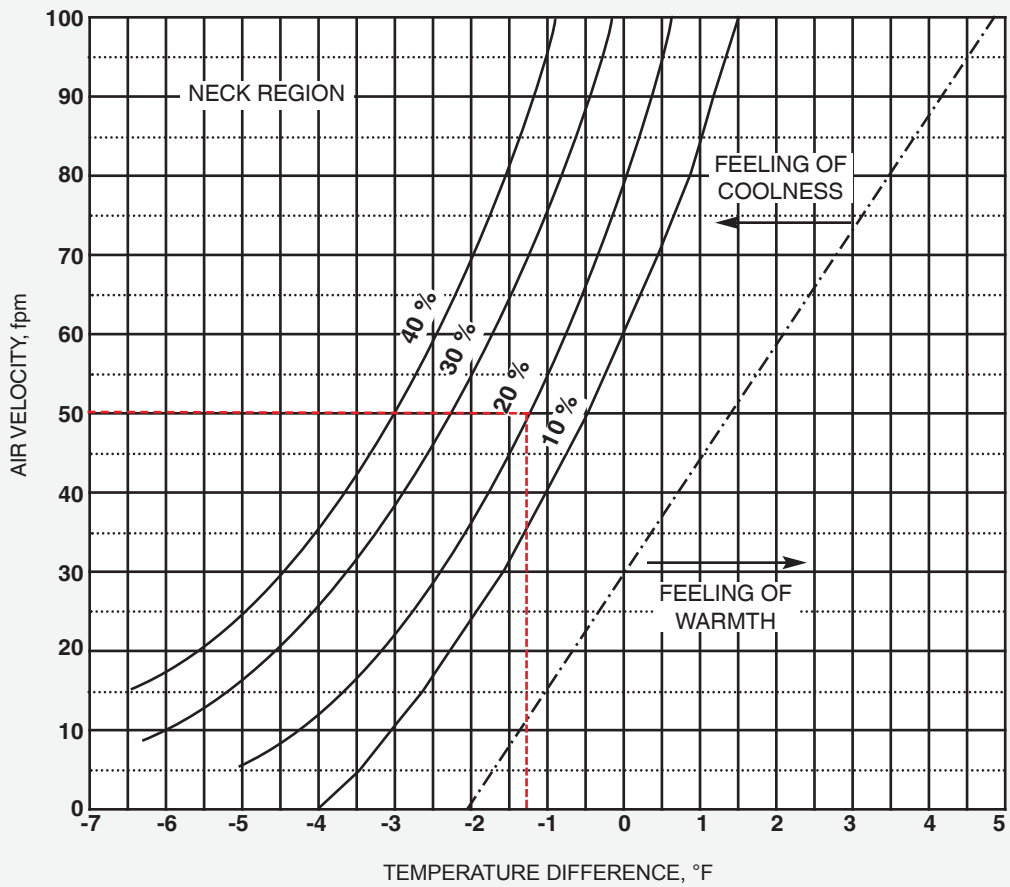

Figure 1: Percentage of Occupants Objecting to Drafts

(Source: 2009 ASHRAE Handbook - Fundamentals)

Selection example

Selection Example:

The office space shown in figure 2 is designed for seven (7) occupants, a sensible cooling load of 12,000 Btu/h and a latent gain of 1,400 Btu/h and an infiltration gain of 100 Btu/h. Trane Twenty-four II model beams will be used to serve the space. An outdoor airflow rate of 105 cfm (15 cfm per person) minimum.

The room will be controlled at 75°F with a dew point temperature not to exceed 57°F (the chilled water supply temperature to the beams) — this temperature corresponds to a humidity ratio of 69 grains. Primary air is delivered at 55°F with a humidity ratio of 54 grains (51°F dew point temperature).

The beams will be mounted flush in an eight foot six inch (8' 6") high ceiling and the occupied zone height will be five feet six inches (5' 6").

Determine the required space primary airflow rate and select/locate the beams such that no velocities exceeding 50 fpm will enter the defined occupied zone.

Solution:

The primary airflow rate must be sufficient to cool and ventilate the space while providing sufficient latent heat removal to maintain the required space dew point temperature (57°F).

The primary airflow rate required to maintain the design space dew point is thus calculated as:

$$\dot{V}_{LAT} = \dot{Q}_{LAT} / (.68 \times \Delta_W)$$
$$= 1{,}500 / [(.68 \times (69 - 54) = 147 \text{ cfm}$$

Therefore the airflow needed to meet the latent requirements is 147 cfm and as this volume exceeds the outdoor airflow rate of 105 cfm, 147 cfm becomes the predominant minimum rate needed under these design conditions, of which, 105 cfm must be outdoor air.

From the table on page 8, it can be seen that a single beam at 147 cfm can not be selected to achieve, 12,000 Btu/h, the nearest being a 10' G nozzle @ 150 cfm giving 7797 Btu/h. If you consider 2 beams @ 75 cfm, an 8' with M nozzle gives 5101 Btu/h, so 2 beams provides 10202 Btu/h which is insufficient, therefore 3 beams are required.

If we consider 3 beams for this space, by referring to the table on page 8, three eight (8) foot beams with "Z" nozzles delivering 50 cfm each and a water flow rate of 1.25 GPM will provide a total sensible cooling of:

4057 Btu/h ($\dot{Q}p_r + \dot{Q}_{CW}$) = (1090 + 2967) each
Thus three beams = 12,171 Btu and 150 cfm
Sensible cooling and latent air volume is achieved.

As this airflow requirement exceeds the space ventilation requirement and is slightly greater than that required for space dehumidification, the selection is confirmed.

The individual acoustical level of each beam is NC21. Logarithmic addition of the two noise sources results in a space of NC level of 24.

The beams' throw to a terminal velocity of 50 fpm is 7 feet.

The throw to 50 fpm should not exceed half their (center line) spacing plus the distance from the ceiling to the top of the occupied zone. In this case the vertical distance is three (3) feet so the beams should be spaced at least five (4) feet from the collision point midway between them. This corresponds to a minimum beam center line spacing of eight (8) feet.

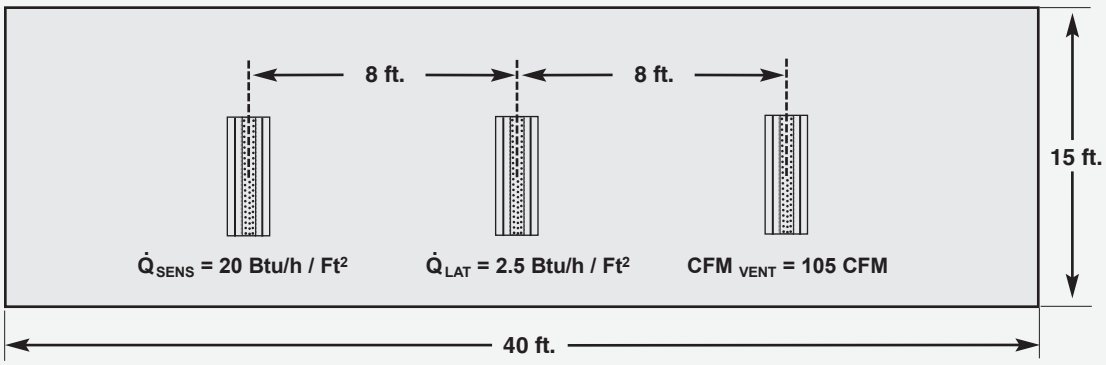

Figure 2: Chilled beam locations for selection example

Specification Text - Twenty-Four II
Trane model CBCA (length) 22 & CBWA (length) 32
Issue date: September 17, 2010

PART 1 - GENERAL

1.01 SECTION INCLUDES

A. Twenty four (24) inch wide 2-way active chilled beams units code CBCA; these are increased to thirty six (36) inches wide when used in an exposed mounted application: code CBWA

1.02 PRODUCTS FURNISHED BUT NOT INSTALLED UNDER THIS SECTION

A. Section 15952 - Controls and Instrumentation: Thermostats and control components.
B. Section 16180 - Equipment Wiring Systems: Thermostats and control components.

1.03 PRODUCTS INSTALLED BUT NOT FURNISHED UNDER THIS SECTION

A. None.

1.04 RELATED SECTIONS

A. Section 15510 - Hydronic Piping: Connections to coils.
B. Section 15515 - Hydronic Specialties: Connections to coils.
C. Section 15890 - Ductwork.
D. Section 15910 - Ductwork Accessories.
E. Section 15952 - Controls and Instrumentation.

1.05 REFERENCES

A. NFPA 90A - Installation of Air Conditioning and Ventilation Systems.
B. ASTM A 527 (Steel Sheet, Zinc Coated Galvanized).

1.06 SUBMITTALS

A. Submit product data for all items complete with the following information:
   1. Operating weights and dimensions of all unit assemblies.
   2. Performance data using the room temperature as the induced temperature to the coil (unless otherwise stated), including air and water sensible cooling capacities, nozzle types, primary airflow rates, chilled (and where applicable hot) water flow rates, noise levels, air and water side pressure losses and maximum discharge air throw values and temperature differences at these locations.
   3. Construction details and dimensions including manufacturer's recommendations for installation, mounting and connection.

1.07 SYSTEM RESPONSIBILITY

A. The contractor shall be responsible for any and all costs associated with any and all changes resulting from the use of a supplier other than the listed acceptable manufacturers, or for any differences caused as a result of using the non-basis of design chilled beam supplier.
B. The duct system & chilled (& hot) water distribution system is computer designed for air and water balancing and noise control using the performance data of the listed manufacturer. Substituting another chilled beam manufacturer may require changes in the system design. These changes may include, but are not limited to, changes in ductwork size or layout, the chilled (& hot) water distribution system, fittings, controls, building structure and piping. The installing contractor, upon substituting an approved alternate, must submit a computerized duct design showing system pressure requirements and acoustic data for the complete duct layout and the resized pipe work distribution system.
C. The air distribution system, including terminal units, direct digital controls and ATC/Building Management System shall be furnished by a single manufacturer who shall be responsible for system performance. If the terminal unit supplier is different from the control system supplier, then one of the two suppliers must bear sole responsibility for proper system performance. The supplier bearing responsibility shall be identified at the time of bid.

1.08 WARRANTY

A. Provide manufacturer's parts warranty for one year from unit start-up or eighteen months from unit shipment, whichever is shorter.

PART 2 - PRODUCTS

2.01 MANUFACTURERS

A. **General** - Furnish and install active chilled beams of sizes and capacities as indicated on the drawings and within the mechanical equipment schedules. The quantity and length of the beams shall be as shown on the drawings and listed in the schedules, without exception in the tender.
   Note: Shorter beams to the lengths specified, can only be offered as a cost saving alternative and these must clearly demonstrate that, under the design conditions, the terminal velocities into the occupied zone do not exceed the velocities from the specified/scheduled lengths whilst meeting all the other parameters.
B. The beams shall be factory constructed and delivered to the job site as single units.
C. Materials and products required for the work of this section shall not contain asbestos, polychlorinated biphenyls (PCB) or other hazardous materials identified by the engineer or owner.

****
Choose only one of the following OR paragraphs:
****

D1. **Acceptable Manufacturers**
   1. Trane models CBCA or CBWA. (Basis of design)
   2. Trox models [_____.]
   3. Titus models [_____.]

******* OR *******

D2. Base bid shall be Trane Chilled Beam air terminal units with alternatives being considered for Trox or Titus. Job will be awarded on basis of specified product. Alternative will be evaluated and approved within 14 calendar days of award of contract. Alternatives must comply with the performance and features as specified, with the specifications and as indicated on the design documents.

2.02 MANUFACTURED UNITS

A. Twenty four (24) inch wide 2-way active chilled beams units code CBCA; these are increased to thirty six (36) inch wide when used in an exposed mounted application: code CBWA.
B. Identify each Chilled beam with clearly marked identification label with product code, QA inspection marks and coil inspection, test and QA mark.
C. Supply each chilled beam are a low tack film that covers the entire face of the beam.

(continued next page)

2.03 FABRICATION

A. The face of the beam shall consist of a removable room air induction section of 50% free area perforated steel flanked by two linear supply slots, the induction section shall lock into position.

B. The entire visible face section shall be finished in white powder coat paint or as specified by the architect.

C. The ceiling mounted (code CBCA) beam shall be provided with side and end flat border which will allow its integration into the flat T-Bar grid at twenty four (24) inch centers on width. Beams when used for exposed mounting applications (code CBWA) shall include factory mounted Coanda plates which extend the twenty four (24) inch face to thirty six (36) inches wide (nom) to assure a horizontal discharge of the supply air.

D. The beams shall consist of minimum 20 gauge steel housing which encases the integral sensible cooling coil and a primary air plenum feeding a series of induction nozzles. If the primary air temperature selected is more than 3.5°F below the room dew point, internal insulation on the underside of the primary air chamber between nozzles must be factory fitted. The outside surfaces of the plenum and inside and outside surfaces of the inlet connection shall be finished with black powder coat paint.

E. The beam inlet shall be side, end or top inlet as identified in the schedule.
   1. Side and end inlets primary air connection shall be capable of being site repositioned as needed.

F. The overall height of the 2-way beams shall not exceed 8¾ inches.

G. Each beam shall be provided with a pressure tap that may be used to measure the pressure differential between the primary air plenum and the room. An airflow calibration chart which relates this pressure differential reading with the primary and beam supply airflow rates shall be provided by the beam supplier.

H. Beams shall be provided with connections for either 2 or 4 pipe operation as indicated on plans and schedules.
   1. Four pipe configurations shall require separate supply and return connections for chilled and hot water.
   2. The coil shall be mounted horizontally and shall be manufactured with seamless copper tubing (1/2 inch outside diameter) with minimum 0.05 inch wall thickness mechanically fixed to aluminum fins.
      a. The aluminum fins shall be limited to no more than eight (8) fins per inch.
      b. The coil shall have a working pressure of at least 300 PSI and be factory tested for leakage at a minimum pressure of 360 PSI.
      c. Each chilled beam shall be provided with factory integrated drain and vent fittings.
      d. All coils will be supplied clean, pre-flushed and capped off.

****

Choose only one of the following OR paragraphs:

****

e. Unless otherwise specified, the vertical coil connections shall be 1/2 Inch bare copper water pipe size (5/8 inch outside diameter) for field sweating to the water supply& return circuits.

******* OR *******

f. The chilled water coil vertical connections shall be provided with 1/2 inch NPT male threaded fittings where specified. These fittings must be suitable for field connection to a similar (1/2 inch NPT) female flexible hose spigot , the flexible hose shall be at least 18” long to facilitate field connection (by others).

I. Beam coils shall be delivered clean, flushed and capped to prevent ingress of dirt.

2.04 PERFORMANCE

A. All performance shall be in compliance with that shown on the equipment schedule. Acoustical testing shall have been performed in accordance with ANSI S12.51.

B. Coils shall be rated in accordance with ARI Standard 410, but their cooling and heating capacities shall be established in accordance to EN Standard 15116 for the specific application on the inlet side of the submitted chilled beam.

C. Primary airflow rates shall not result in supply (primary plus induced) airflow rates in excess of 40 CFM per linear foot of beam.

D. Chilled water flow rates to the beams shall be limited to that which results in a maximum ten (10) foot head loss. Water flow velocities through the beam shall not exceed four (4) feet per second (FPS).

PART 3 EXECUTION

3.01 INSTALLATION

A. Install in accordance with manufacturer's instructions.

B. The beam should be visually inspected before it is installed. Beams should not be installed if they show any signs of damage and coils should never be connected if there are any signs of damage to the coil water circuits or its connections.

C. Coordinate the size, tagging and capacity of the beams to their proper location.

D. Chilled beams up to ten feet in length shall be independently suspended from the structure above by four (4) threaded rods of 3/8 inch diameter (by others).

****

Choose the following paragraphs as required for jobsite application. The following paragraphs represent an option for this product:

****

E. A lateral adjustment kit shall be factory supplied consisting of 2 uni-strut channels and 4 rod drops and fixings that are:
   1. Mounted perpendicular to the beam length
   2. At least twelve inches wider than the beam.
   3. The rods shall be fixed by the installer to factory furnished mounting slots on the beam such that the beam can be repositioned in the direction of its length. The lateral adjustment kits shall allow adjustment perpendicular to the beam length.

F. The beam, either with or without lateral adjustment kit, shall be hung below the structural slab by the installer who will supply the appropriate wire or drop rods and fixings (according to the applicable building code). The beam shall then be positioned either into the acoustical ceiling grid where ceiling mounted or at the appropriate level when exposed mounted and leveled horizontally by adjusting the nuts connecting the threaded rods either to the beam or the lateral adjustment kit.

G. Before connecting the supply water system(s) to the beams, contractor shall flush the piping system(s) to assure that all debris and other matter have been removed.

H. Contractor shall perform connection of beams to the chilled water circuit by method specified (sweated hard connection or connection using flexible hoses).

****

Choose the following paragraphs as required for jobsite application. The following paragraphs represent an option for this product:

****

I. Flexible water connector hoses shall be furnished by others.
   1. Hoses shall be eighteen (18) inches in length and suitable for operation with a bend radius as small as five (5) inches. Such hoses shall be 100% tested and certified for no leakage at 500 PSI.
   2. Connector hoses shall consist of a PFTE lined hose with a wire braided jacket. The hoses shall be suitable for operation in an environment between -40 and 200˚F, rated for a least 400 PSI (1600 PSI burst).
   3. Contractor shall assure that the chilled water supplying the beams has been properly treated in accordance to BSRIA publication AG 2/93.

******* OR *******

J. Flexible water connector hoses shall be furnished by the beam supplier.
   1. Hoses shall be eighteen (18) inches in length and suitable for operation with a bend radius as small as five (5) inches. Such hoses shall be 100% tested and certified for no leakage at 500 PSI.
   2. Connector hoses shall consist of a PFTE lined hose with a wire braided jacket. The hoses shall be suitable for operation in an environment between -40 and 200˚F, rated for a least 400 PSI (1600 PSI burst).
   3. Contractor shall assure that the chilled water supplying the beams has been properly treated in accordance to BSRIA publication AG 2/93.

****

K. No power or direct control connections shall be required for the operation of the chilled beam.

3.02 CLEANING and PROTECTION

A. Protect units before, during and after installation. Damaged material due to improper site protection shall be cause for rejection.
B. Clean equipment, repair damaged finishes as required to restore beams to as-new appearance.

3.03 ADJUSTING

A. Reset air flow balancing damper to each chilled beam terminal unit to provide flow as shown on the drawings and listed in the schedules, without exception. Ensure primary airflow is at correct temperature.
B. Ensure correct chilled water (& hot where applicable) flow temperature and volume to each chilled beam when the zonal control values are operated.

END OF SECTION

Specification Text - Twenty-Four I
Trane model CBCA (length) 21 & CBWA (length) 31
Issue Date: September 17, 2010

PART 1- GENERAL

1.01 SECTION INCLUDES

A. Twenty four (24) inch wide 1-way active chilled beams units code CBCA; these are increased to thirty six (36) inches wide when used in an exposed mounted application: code CBWA

1.02 PRODUCTS FURNISHED BUT NOT INSTALLED UNDER THIS SECTION

A. Section 15952 - Controls and Instrumentation: Thermostats and control components.

B. Section 16180 - Equipment Wiring Systems: Thermostats and control components.

1.03 PRODUCTS INSTALLED BUT NOT FURNISHED UNDER THIS SECTION

A. None.

1.04 RELATED SECTIONS

A. Section 15510 - Hydronic Piping: Connections to coils.
B. Section 15515 - Hydronic Specialties: Connections to coils.
C. Section 15890 - Ductwork.
D. Section 15910 - Ductwork Accessories.
E. Section 15952 - Controls and Instrumentation.

1.05 REFERENCES

A. NFPA 90A - Installation of Air Conditioning and Ventilation Systems.
B. ASTM A 527 (Steel Sheet, Zinc Coated Galvanized).

1.06 SUBMITTALS

A. Submit product data for all items complete with the following information:
   1. Operating weights and dimensions of all unit assemblies.
   2. Performance data using the room temperature as the induced temperature to the coil (unless otherwise stated), including air and water sensible cooling capacities, nozzle types, primary
      airflow rates, chilled (and where applicable hot) water flow rates, noise levels, air and water side pressure losses and maximum discharge air throw values and temperature differences at these locations.
   3. Construction details and dimensions including manufacturer's recommendations for installation, mounting and connection.

1.07 SYSTEM RESPONSIBILITY

A. The contractor shall be responsible for any and all costs associated with any and all changes resulting from the use of a supplier other than the listed acceptable manufacturers, or for any differences caused as a result of using the non-basis of design chilled beam supplier.
B. The duct system & chilled (& hot) water distribution system is computer designed for air and water balancing and noise control using the performance data of the listed manufacturer. Substituting another chilled beam manufacturer may require changes in the system design. These changes may include, but are not limited to, changes in ductwork size or layout, the

(Continued next page)

chilled (& hot) water distribution system, fittings, controls, building structure and piping. The installing contractor, upon substituting an approved alternate, must submit a computerized duct design showing system pressure requirements and acoustic data for the complete duct layout and the resized pipe work distribution system.

C. The air distribution system, including terminal units, direct digital controls and ATC/Building Management System shall be furnished by a single manufacturer who shall be responsible for system performance. If the terminal unit supplier is different from the control system supplier, then one of the two suppliers must bear sole responsibility for proper system performance. The supplier bearing responsibility shall be identified at the time of bid.

1.08 WARRANTY

A. Provide manufacturer's parts warranty for one year from unit start-up or eighteen months from unit shipment, whichever is shorter.

PART 2 PRODUCTS

2.01 MANUFACTURERS

A. General - Furnish and install active chilled beams of sizes and capacities as indicated on the drawings and within the mechanical equipment schedules. The quantity and length of the beams shall be as shown on the drawings and listed in the schedules, without exception in the tender.
Note: Shorter beams to the lengths specified, can only be offered as a cost saving alternative and these must clearly demonstrate that, under the design conditions, the terminal velocities into the occupied zone do not exceed the velocities from the specified/scheduled lengths whilst meeting all the other parameters.

B. The beams shall be factory constructed and delivered to the job site as single units.

C. Materials and products required for the work of this section shall not contain asbestos, polychlorinated biphenyls (PCB) or other hazardous materials identified by the engineer or owner.

****
Choose only one of the following OR paragraphs:
****

D1. **Acceptable Manufacturers**
1. Trane models CBCA or CBWA. (Basis of design)
2. Trox models [_____.]
3. Titus models [_____.]

***** **OR** *****

D2. Base bid shall be Trane Chilled Beam air terminal units with alternatives being considered for Trox or Titus. Job will be awarded on basis of specified product. Alternative will be evaluated and approved within 14 calendar days of award of contract. Alternatives must comply with the performance and features as specified, with the specifications and as indicated on the design documents.

2.02 MANUFACTURED UNITS

A. Twenty four (24) inch wide 1-way active chilled beams units code CBCA; these are increased to thirty six (36) inches wide when used in an exposed mounted application: code CBWA.

B. Identify each Chilled beam with clearly marked identification label with product code, QA inspection marks & coil inspection, test & QA mark.

C. Supply each chilled beam are a low tack film that covers the entire face of the beam.

2.03 FABRICATION

A. The face of the beam shall consist of a removable room air induction section of 50% free area perforated steel flanked by two linear supply slots, the induction section shall lock into position.

B. The entire visible face section shall be finished in white powder coat paint or as specified by the architect.

C. The ceiling mounted (code CBCA) beam shall be provided with side and end flat border which will allow its integration into the flat T-Bar grid at twenty four (24) inch centers on width. Beams when used for exposed mounting applications (code CBWA) shall include factory mounted Coanda plates which extend the twenty four (24) inch face to thirty six (36) inches wide (nom) to assure a horizontal discharge of the supply air.

D. The beams shall consist of minimum 20 gauge steel housing which encases the integral sensible cooling coil and a primary air plenum feeding a series of induction nozzles. If the primary air temperature selected is more than 3.5°F below the room dew point, internal insulation on the underside of the primary air chamber between nozzles must be factory fitted. The outside surfaces of the plenum and inside and outside surfaces of the inlet connection shall be finished with black powder coat paint.

E. The beam inlet shall be side, end or top inlet as identified in the schedule.
1. Side and end inlets primary air connection shall be capable of being site repositioned as needed.

F. The overall height of the 1-way beam shall not exceed 8¾ inches.

G. Each beam shall be provided with a pressure tap that may be used to measure the pressure differential between the primary air plenum and the room. An airflow calibration chart which relates this pressure differential reading with the primary and beam supply airflow rates shall be provided by the beam supplier.

H. Beams shall be provided with connections for either 2 or 4 pipe operation as indicated on plans and schedules.
1. Four pipe configurations shall require separate supply and return connections for chilled and hot water.
2. The coil shall be mounted horizontally and shall be manufactured with seamless copper tubing (1/2 inch outside diameter) with minimum 0.05 inch wall thickness mechanically fixed to aluminum fins.
   a. The aluminum fins shall be limited to no more than eight (8) fins per inch.
   b. The coil shall have a working pressure of at least 300 PSI and be factory tested for leakage at a minimum pressure of 360 PSI.
   c. Each chilled beam shall be provided with factory integrated drain and vent fittings.
   d. All coils will be supplied clean, pre-flushed and capped off.

****
Choose only one of the following OR paragraphs:
****

e. Unless otherwise specified, the vertical coil connections shall be 1/2 Inch bare copper water pipe size (5/8 inch outside diameter) for field sweating to the water supply & return circuits.

***** **OR** *****

f. The chilled water coil vertical connections shall be provided with 1/2 inch NPT male threaded fittings where specified. These fittings must be suitable for field

connection to a similar (1/2 inch NPT) female flexible hose spigot, the flexible hose shall be at least 18” long to facilitate field connection (by others).

I. Beam coils shall be delivered clean, flushed and capped to prevent ingress of dirt.

2.04 PERFORMANCE

A. All performance shall be in compliance with that shown on the equipment schedule. Acoustical testing shall have been performed in accordance with ANSI S12.51.
B. Coils shall be rated in accordance with ARI Standard 410, but their cooling and heating capacities shall be established in accordance to EN Standard 15116 for the specific application on the inlet side of the submitted chilled beam.
C. Primary airflow rates shall not result in supply (primary plus induced) airflow rates in excess of 40 CFM per linear foot of beam.
D. Chilled water flow rates to the beams shall be limited to that which results in a maximum ten (10) foot head loss. Water flow velocities through the beam shall not exceed four (4) feet per second (FPS).

PART 3 EXECUTION

3.01 INSTALLATION

A. Install in accordance with manufacturer's instructions.
B. The beam should be visually inspected before it is installed. Beams should not be installed if they show any signs of damage and coils should never be connected if there are any signs of damage to the coil water circuits or its connections.
C. Coordinate the size, tagging and capacity of the beams to their proper location.
D. Chilled beams up to ten feet in length shall be independently suspended from the structure above by four (4) threaded rods of 3/8 inch diameter (by others).

****

Choose the following paragraphs as required for jobsite application. The following paragraphs represent an option for this product:

****

E. A lateral adjustment kit shall be factory supplied consisting of 2 uni-strut channels and 4 rod drops and fixings that are:
   1. Mounted perpendicular to the beam length
   2. At least twelve inches wider than the beam.
   3. The rods shall be fixed by the installer to factory furnished mounting slots on the beam such that the beam can be repositioned in the direction of its length. The lateral adjustment kits shall allow adjustment perpendicular to the beam length.
F. The beam, either with or without lateral adjustment kit, shall be hung below the structural slab by the installer who will supply the appropriate wire or drop rods and fixings (according to the applicable building code. to hang the beam with/without adjustment kit from the slab. The beam shall then be positioned either into the acoustical ceiling grid where ceiling mounted or at the appropriate level when exposed mounted and leveled horizontally by adjusting the nuts connecting the threaded rods either to the beam or the lateral adjustment kit.
G. Before connecting the supply water system(s) to the beams, contractor shall flush the piping system(s) to assure that all debris and other matter have been removed.
H. Contractor shall perform connection of beams to the chilled water circuit by method specified (sweated hard connection or connection using flexible hoses).

****

Choose the following paragraphs as required for jobsite application. The following paragraphs represent an option for this product:

****

I. Flexible water connector hoses shall be furnished by others.
   1. Hoses shall be eighteen (18) inches in length and suitable for operation with a bend radius as small as five (5) inches. Every hose shall be 100% tested and certified for no leakage at 500 PSI.
   2. Connector hoses shall consist of a PFTE lined hose with a wire braided jacket. The hoses shall be suitable for operation in an environment between -40 and 200˚F, rated for a least 400 PSI (1600 PSI burst).
   3. Contractor shall assure that the chilled water supplying the beams has been properly treated in accordance to BSRIA publication AG 2/93.

******* OR *******

J. Flexible water connector hoses shall be furnished by the beam supplier.
   1. Hoses shall be eighteen (18) inches in length and suitable for operation with a bend radius as small as five (5) inches. Every hose shall be 100% tested and certified for no leakage at 500 PSI.
   2. Connector hoses shall consist of a PFTE lined hose with a wire braided jacket. The hoses shall be suitable for operation in an environment between -40 and 200˚F, rated for a least 400 PSI (1600 PSI burst).
   3. Contractor shall assure that the chilled water supplying the beams has been properly treated in accordance to BSRIA publication AG 2/93.

****

K. No power or direct control connections shall be required for the operation of the chilled beam.

3.02 CLEANING and PROTECTION

A. Protect units before, during and after installation. Damaged material due to improper site protection shall be cause for rejection.
B. Clean equipment, repair damaged finishes as required to restore beams to as-new appearance.

3.03 ADJUSTING

A. Reset air flow balancing damper to each chilled beam terminal unit to provide flow as shown on the drawings and listed in the schedules, without exception. Ensure primary airflow is at correct temperature.
B. Ensure correct chilled water (& hot where applicable) flow temperature and volume to each chilled beam when the zonal control values are operated.

END OF SECTION

Order Details

TRANE Numbering System: Twenty-four I & II Active Chilled Beams

Chilled	Beam	Where its Mounted	Development Sequence	Length (ft)	Width (ft)	Direction	Nozzle Size	Air Connection	Coil Connection	Paint	Lateral Adjustment Kit
1	2	3	4	5	6	7	8	9	10	11	12
C	**B**	*C or W*	**A**	*4, 6, 8 or 10*	*2 or 3*	*1 or 2*	*Z, M or G*	*(S or R) or (E or G) or (T or V) or N*	*(1 to 4) or (5 to 8)*	*W or S*	*Y or N*

Where is beam mounted?
C = Ceiling Mounted or
W = Exposed Wing

Beam Length (Nom) in ft
C or **W** lengths are Nom 4, 6, 8 and 10ft

Beam Width (Nom) in ft
C = 2ft Nom width or **W** = 3ft Nom width

Number of Discharge Directions
2 = 2-way discharge or **1** = 1-way discharge

Beam Nozzle Size
Z, M, or G (from selection program)

Air Connection
S = side inlet (STD 2-way & 1-way LH discharge)
R = side inlet (2-way & 1-way RH discharge)
E = end inlet (STD 2-way discharge)
E = end inlet (1-way RH discharge)
G = end inlet (STD 1-way RH discharge)
T = top inlet (STD 2-way discharge)
T = top inlet (STD 1-way LH discharge)
V = top inlet (1-way RH discharge)
N = Inlet connection and blanking plates supplied loose (for side installation by others)

Coil Connections, all 1/2" Nom
1 = 2 pipe 1/2" straight pipe (no fitting)
2 = 2 pipe c/w 1/2" Male NPT fittings
Chilled water flow rate above 1.49 GPM on 4ft beam, 1.24 GMP on 6ft, 1.09 GPM on 8ft & 0.99 on 10 ft.
3 = 2 pipe high flow, 1/2" straight pipe (no fitting)
4 = 2 pipe high flow, c/w 1/2" Male NPT fittings
5 = 4 pipe 1/2" straight pipe (no fitting)
6 = 4 pipe c/w 1/2" Male NPT fittings
Chilled water flow rate above 1.49 GPM on 4ft beam, 1.24 GMP on 6ft, 1.09 GPM on 8ft & 0.99 on 10 ft.
5 = 4 pipe high flow 1/2" straight pipe (no fitting)
6 = 4 pipe high flow c/w 1/2" Male NPT fittings

Beam Paint Finish (Powder Coat)
W = Standard White or **S** = Special Color
(Cost extra if color not defined on order)

Lateral Adjustment Kit
Y = Factory Supplied or 'N' = Not included